KD1084xx
KD1084Axx

5 A low drop positive voltage regulator adjustable and fixed

Features

- Typical dropout 1.3 V (at 5 A)
- Three terminal adjustable or fixed output voltage 1.8 V, 2.5 V, 3.3 V.
- Guaranteed output current up to 5 A
- Output tolerance ±1 % at 25 °C and ± 2 % in full temperature range for the "A" version
- Output tolerance ± 2 % at 25 °C and ± 3 % in full temperature range internal power and thermal limit
- Wide operating temp. range -40 °C to 125 °C
- Package available: TO-220, D^2PAK, DPAK
- Pinout compatibility with standard adjustable VREG

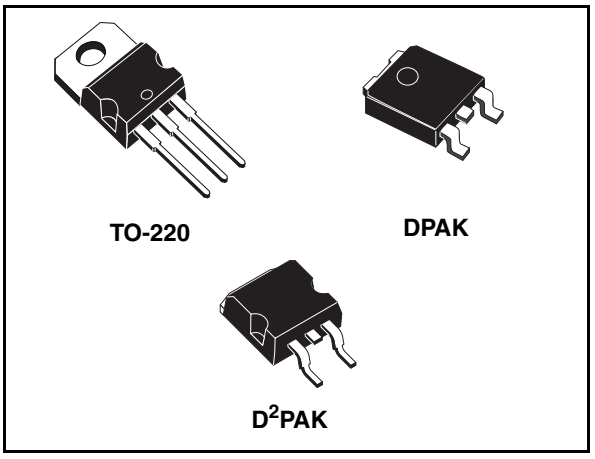

Description

The KD1084xx is a LOW DROP voltage regulator able to provide up to 5 A of output current. Dropout is guaranteed at a maximum of 1.5 V at the maximum output current, decreasing at lower loads. The KD1084xx is pin to pin compatible with he older 3-terminal adjustable regulators but has better performances in term of drop and output tolerance.

A 2.85 V output version is suitable for SCSI-2 active termination. Unlike PNP regulators, where a part of the output current is wasted as quiescent current, the KD1084xx quiescent current flows into the load, so increase efficiency. Only a 10 µF minimum capacitor is need for stability.

The devices are supplied in TO-220, D^2PAK and DPAK. On chip trimming allows the regulator to reach a very tight output voltage tolerance, within ±1% at 25 °C for "A" version and ± 2 % at 25 °C for standard version.

Table 1. Device summary

Part numbers	Order codes				
	TO-220	D^2PAK	DPAK	Output voltage	Tolerance
KD1084AXX18		KD1084AD2T18R		1.8 V	1%
KD1084XX25		KD1084D2T25R	KD1084DT25R	2.5 V	2%
KD1084AXX25			KD1084ADT25R	2.5 V	1%
KD1084XX33			KD1084DT33R	3.3 V	2%
KD1084AXX33	KD1084AV33		KD1084ADT33R	3.3 V	1%
KD1084XX			KD1084DT-R	ADJ	2%
KD1084AXX			KD1084ADT-R	ADJ	1%

Contents

1 Diagram 3

2 Pin configuration 4

3 Maximum ratings 5

4 Schematic application 6

5 Electrical characteristics 7

6 Typical application 13

7 Package mechanical data 15

8 Revision history 21

1 Diagram

Figure 1. Schematic diagram

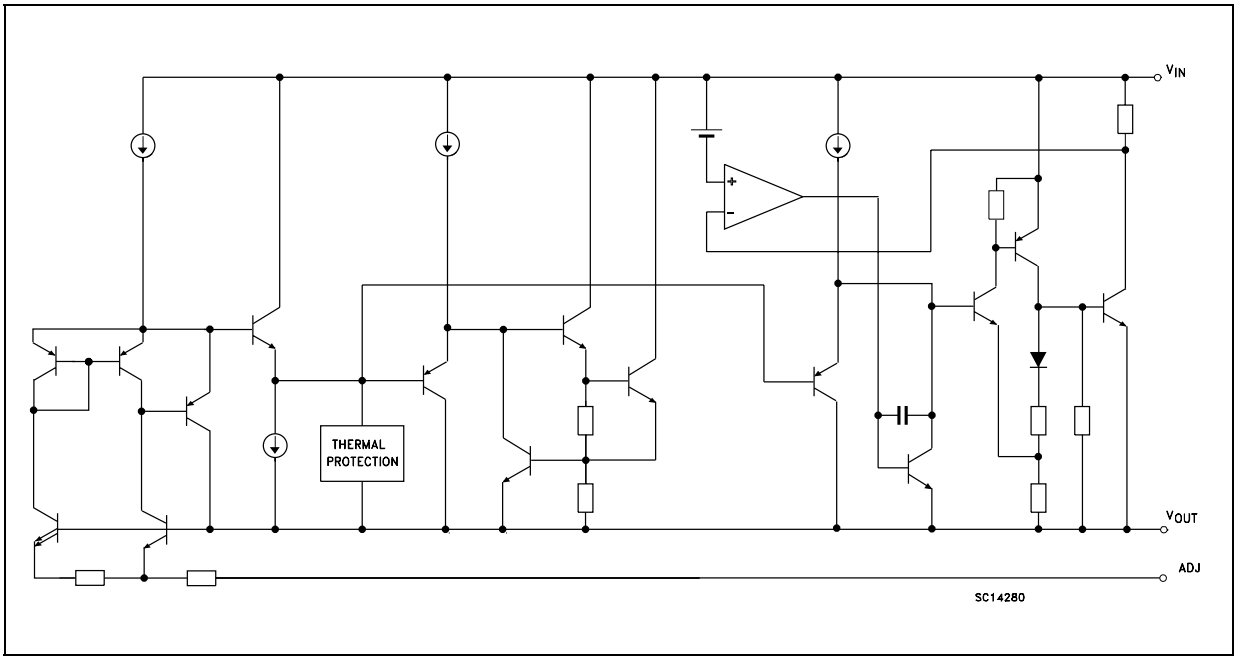

2 Pin configuration

Figure 2. Pin connections (top view)

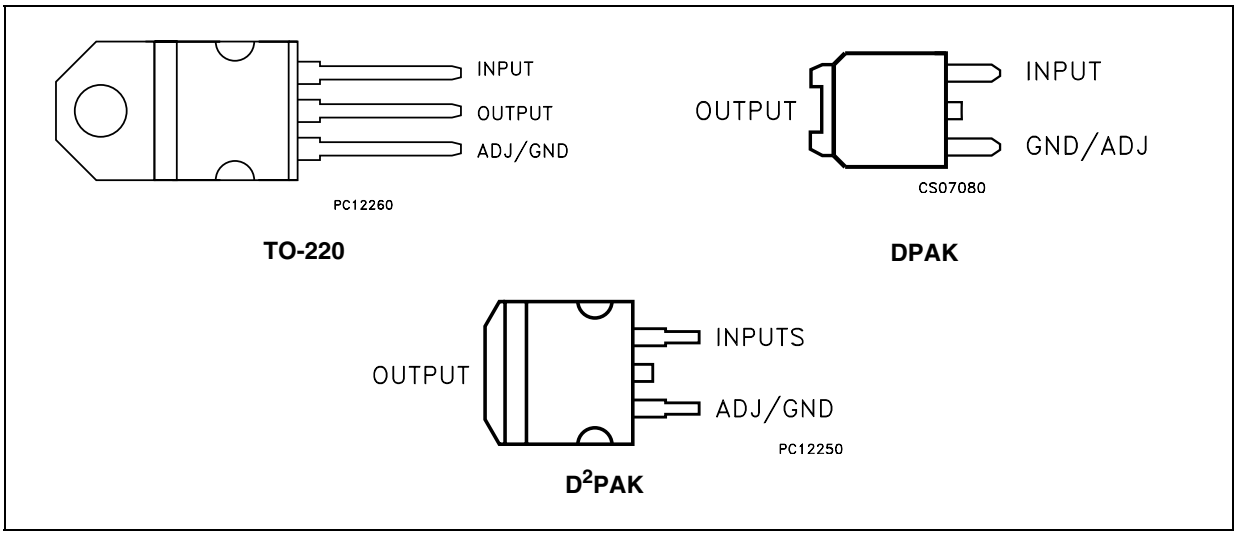

3 Maximum ratings

Table 2. Absolute maximum ratings

Symbol	Parameter	Value	Unit
V_I	DC input voltage	12	V
I_O	Output current	Internally limited	
P_D	Power dissipation	Internally limited	
T_{STG}	Storage temperature range	-55 to +150	°C
T_{OP}	Operating junction temperature range	-40 to +125	°C

Note: Absolute maximum ratings are those values beyond which damage to the device may occur. Functional operation under these condition is not implied.

Table 3. Thermal data

Symbol	Parameter	TO-220	DPAK	D^2PAK	Unit
R_{thJC}	Thermal resistance junction-case	3	8	3	°C/W
R_{thJA}	Thermal resistance junction-ambient	50	100	62.5	°C/W

4 Schematic application

Figure 3. Application circuit

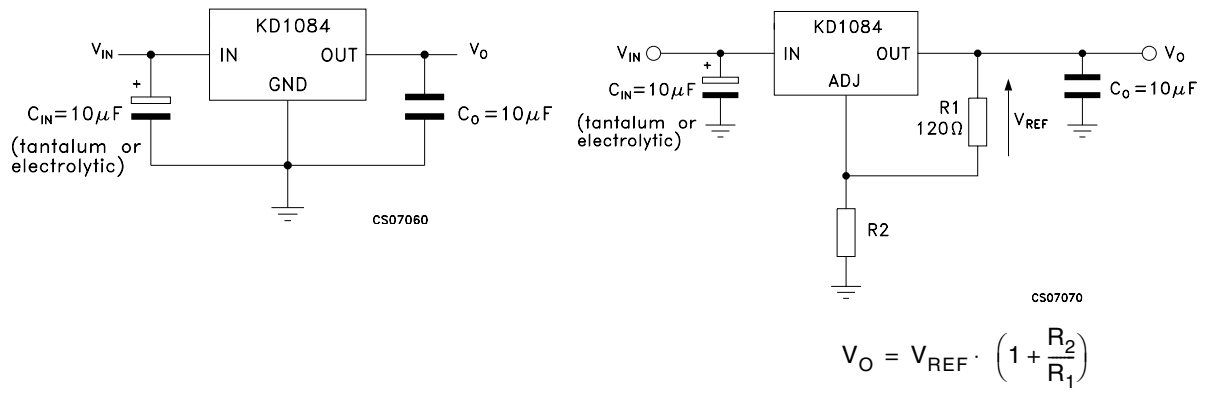

$$V_O = V_{REF} \cdot \left(1 + \frac{R_2}{R_1}\right)$$

5 Electrical characteristics

Table 4. Electrical characteristics of KD1084A#18 (V_I = 4.8 V, C_I = C_O = 10 µF (tant.), T_A = -40 to 125 °C, unless otherwise specified)

Symbol	Parameter	Test conditions	Min.	Typ.	Max.	Unit
V_O	Output voltage	I_O = 0 mA, T_J = 25°C	1.782	1.8	1.818	V
		I_O = 0 to 5A, V_I = 3.4 to 10V	1.764	1.8	1.836	V
ΔV_O	Line regulation	I_O = 0 mA, V_I = 3.4 to 10V T_J = 25°C		0.5	6	mV
		I_O = 0 mA, V_I = 3.4 to 10V		1	6	mV
ΔV_O	Load regulation	I_O = 0 to 5A, T_J = 25°C		3	15	mV
		I_O = 0 to 5A		7	20	V
V_d	Dropout voltage	I_O = 5 A		1.3	1.5	V
I_q	Quiescent current	V_I ≤10V		5	10	mA
I_{sc}	Short circuit current	V_I - V_O = 5V	5.5	7		A
	Thermal regulation	T_A = 25°C, 30ms pulse		0.003	0.015	%/W
SVR	Supply voltage rejection	f = 120 Hz, C_O = 25µF, I_O = 5A V_I = 5.3 ± 1.5V	60	75		dB
eN	RMS Output noise voltage (% of V_O)	T_A = 25°C, f = 10Hz to 10kHz		0.003		%
S	Temperature stability			0.5		%
S	Long term stability	T_A = 125°C, 1000Hrs		0.5		%

Table 5. Electrical characteristics of KD1084A#25 (V_I = 5.5 V, C_I = C_O = 10 µF (tant.), T_A = -40 to 125 °C, unless otherwise specified)

Symbol	Parameter	Test conditions	Min.	Typ.	Max.	Unit
V_O	Output voltage	I_O = 0 mA, T_J = 25°C	2.475	2.5	2.525	V
		I_O = 0 to 5A, V_I = 4.1 to 10V	2.45	2.5	2.55	V
ΔV_O	Line regulation	I_O = 0 mA, V_I = 4.1 to 10V T_J = 25°C		0.5	6	mV
		I_O = 0 mA, V_I = 4.1 to 10V		1	6	mV
ΔV_O	Load regulation	I_O = 0 to 5A, T_J = 25°C		3	15	mV
		I_O = 0 to 5A		7	20	V
V_d	Dropout voltage	I_O = 5 A		1.3	1.5	V
I_q	Quiescent current	V_I ≤10V		5	10	mA
I_{sc}	Short circuit current	V_I - V_O = 5V	5.5	7		A
	Thermal regulation	T_A = 25°C, 30ms pulse		0.003	0.015	%/W
SVR	Supply voltage rejection	f = 120 Hz, C_O = 25µF, I_O = 5A V_I = 6 ± 1.5V	60	72		dB
eN	RMS Output noise voltage (% of V_O)	T_A = 25°C, f = 10Hz to 10kHz		0.003		%
S	Temperature stability			0.5		%
S	Long term stability	T_A = 125°C, 1000Hrs		0.5		%

Table 6. Electrical characteristics of KD1084A#33 (V_I = 6.3 V, C_I = C_O = 10 µF (tant.), T_A = -40 to 125 °C, unless otherwise specified)

Symbol	Parameter	Test conditions	Min.	Typ.	Max.	Unit
V_O	Output voltage	I_O = 0 mA, T_J = 25°C	3.267	3.3	3.333	V
		I_O = 0 to 5A, V_I = 4.9 to 10V	3.234	3.35	3.366	V
ΔV_O	Line regulation	I_O = 0 mA, V_I = 4.9 to 10V T_J = 25°C		0.5	6	mV
		I_O = 0 mA, V_I = 4.9 to 10V		1	6	mV
ΔV_O	Load regulation	I_O = 0 to 5A, T_J = 25°C		3	15	mV
		I_O = 0 to 5A		7	20	V
V_d	Dropout voltage	I_O = 5 A		1.3	1.5	V
I_q	Quiescent current	$V_I \leq$10V		5	10	mA
I_{sc}	Short circuit current	V_I - V_O = 5V	5.5	7		A
	Thermal regulation	T_A = 25°C, 30ms pulse		0.003	0.015	%/W
SVR	Supply voltage rejection	f = 120 Hz, C_O = 25µF, I_O = 5A V_I = 6.8 ± 1.5V	60	72		dB
eN	RMS Output noise voltage (% of V_O)	T_A = 25°C, f = 10Hz to 10kHz		0.003		%
S	Temperature stability			0.5		%
S	Long term stability	T_A = 125°C, 1000Hrs		0.5		%

Table 7. Electrical characteristics of KD1084A (V_I = 4.25 V, C_I = C_O = 10 µF (tant.), T_A = -40 to 125°C, unless otherwise specified)

Symbol	Parameter	Test conditions	Min.	Typ.	Max.	Unit
V_O	Output voltage	I_O = 10 mA, T_J = 25°C	1.237	1.25	1.263	V
		I_O = 10 mA to 5A, V_I = 2.85 to 10V	1.225	1.25	1.275	V
ΔV_O	Line regulation	I_O = 10 mA, V_I = 2.85 to 10V T_J = 25°C		0.015	0.2	mV
		I_O = 10 mA, V_I = 2.85 to 10V		0.035	0.2	mV
ΔV_O	Load regulation	I_O = 10 mA to 5A, T_J = 25°C		0.1	0.3	mV
		I_O = 10 mA to 5A		0.2	0.4	V
V_d	Dropout voltage	I_O = 5 A		1.3	1.5	V
$I_{O(min)}$	Quiescent current	$V_I \leq$10V		3	10	mA
I_{sc}	Short circuit current	V_I - V_O = 5V	5.5	7		A
	Thermal regulation	T_A = 25°C, 30ms pulse		0.003	0.015	%/W
SVR	Supply voltage rejection	f = 120 Hz, C_O = 25µF, C_{ADJ} = 25µF, I_O = 5A, V_I = 4.75 ± 1.5V	60	72		dB
I_{ADJ}	Adjust pin current	V_I = 4.25V, I_O = 10 mA		55	120	µA
ΔI_{ADJ}	Adjust pin current change	V_I = 2.85 to 10V, I_O = 10 mA to 5A		0.2	5	µA
eN	RMS Output noise voltage (% of V_O)	T_A = 25°C, f = 10Hz to 10kHz		0.003		%
S	Temperature stability			0.5		%
S	Long term stability	T_A = 125°C, 1000Hrs		0.5		%

Table 8. Electrical characteristics of KD1084#25 (V_I = 5.5 V, C_I = C_O = 10 µF (tant.), T_A = -40 to 125°C, unless otherwise specified)

Symbol	Parameter	Test conditions	Min.	Typ.	Max.	Unit
V_O	Output voltage	I_O = 0 mA, T_J = 25°C	2.45	2.5	2.55	V
		I_O = 0 to 5A, V_I = 4.1 to 10V	2.425	2.5	2.575	V
ΔV_O	Line regulation	I_O = 0 mA, V_I = 4.1 to 10V T_J = 25°C		0.5	6	mV
		I_O = 0 mA, V_I = 4.1 to 10V		1	6	mV
ΔV_O	Load regulation	I_O = 0 to 5A, T_J = 25°C		3	15	mV
		I_O = 0 to 5A		7	20	V
V_d	Dropout voltage	I_O = 5 A		1.3	1.5	V
I_q	Quiescent current	$V_I \leq$10V		5	10	mA
I_{sc}	Short circuit current	V_I - V_O = 5V	5.5	7		A
	Thermal regulation	T_A = 25°C, 30ms pulse		0.003	0.015	%/W
SVR	Supply voltage rejection	f = 120 Hz, C_O = 25µF, I_O = 5A V_I = 6 ± 1.5V	60	72		dB
eN	RMS Output noise voltage (% of V_O)	T_A = 25°C, f = 10Hz to 10kHz		0.003		%
S	Temperature stability			0.5		%
S	Long term stability	T_A = 125°C, 1000Hrs		0.5		%

Table 9. Electrical characteristics of KD1084#33 (V_I = 5.85 V, C_I = C_O = 10 µF (tant.), T_A = -40 to 125°C, unless otherwise specified)

Symbol	Parameter	Test conditions	Min.	Typ.	Max.	Unit
V_O	Output voltage	I_O = 0 mA, T_J = 25°C	3.234	3.3	3.366	V
		I_O = 0 to 5A, V_I = 4.9 to 10V	3.2	3.3	3.4	V
ΔV_O	Line regulation	I_O = 0 mA, V_I = 4.9 to 10V T_J = 25°C		0.5	6	mV
		I_O = 0 mA, V_I = 4.9 to 10V		1	6	mV
ΔV_O	Load regulation	I_O = 0 to 5A, T_J = 25°C		3	15	mV
		I_O = 0 to 5A		7	20	V
V_d	Dropout voltage	I_O = 5 A		1.3	1.5	V
I_q	Quiescent current	$V_I \leq$10V		5	10	mA
I_{sc}	Short circuit current	V_I - V_O = 5V	5.5	7		A
	Thermal regulation	T_A = 25°C, 30ms pulse		0.003	0.015	%/W
SVR	Supply voltage rejection	f = 120 Hz, C_O = 25µF, I_O = 5A V_I = 6.8 ± 1.5V	60	72		dB
eN	RMS Output noise voltage (% of V_O)	T_A = 25°C, f = 10Hz to 10kHz		0.003		%
S	Temperature stability			0.5		%
S	Long term stability	T_A = 125°C, 1000Hrs		0.5		%

Table 10. Electrical characteristics of KD1084 (V_I = 4.25 V, C_I = C_O = 10 µF (tant.), T_A = -40 to 125 °C, unless otherwise specified)

Symbol	Parameter	Test conditions	Min.	Typ.	Max.	Unit
V_O	Output voltage	I_O = 10 mA, T_J = 25°C	1.225	1.25	1.275	V
		I_O = 10 mA to 5A, V_I = 2.85 to 10V	1.213	1.25	1.287	V
ΔV_O	Line regulation	I_O = 10 mA, V_I = 2.85 to 10V T_J = 25°C		0.015	0.2	mV
		I_O = 10 mA, V_I = 2.85 to 10V		0.035	0.2	mV
ΔV_O	Load regulation	I_O = 10 mA to 5A, T_J = 25°C		1	0.3	mV
		I_O = 10 mA to 5A		0.2	0.4	V
V_d	Dropout voltage	I_O = 5 A		1.3	1.5	V
$I_{O(min)}$	Quiescent current	$V_I \leq$10V		3	10	mA
I_{sc}	Short circuit current	V_I - V_O = 5V	5.5	7		A
	Thermal regulation	T_A = 25°C, 30ms pulse		0.003	0.015	%/W
SVR	Supply voltage rejection	f = 120 Hz, C_O = 25µF, C_{ADJ} = 25µF, I_O = 5A, V_I = 4.75 ± 1.5V	60	72		dB
I_{ADJ}	Adjust pin current	V_I = 4.25V, I_O = 10 mA		55	120	µA
ΔI_{ADJ}	Adjust pin current change	V_I = 2.85 to 10V, I_O = 10 mA to 5A		0.2	5	µA
eN	RMS Output noise voltage (% of V_O)	T_A = 25°C, f = 10Hz to 10kHz		0.003		%
S	Temperature stability			0.5		%
S	Long term stability	T_A = 125°C, 1000Hrs		0.5		%

6 Typical application

Unless otherwise specified T_J = 25 °C, C_I = C_O = 10 µF (tant.)

Figure 4. Dropout voltage vs output current

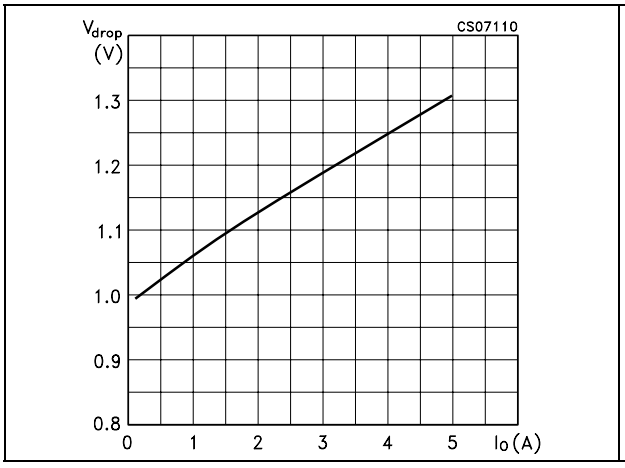

Figure 5. Dropout voltage vs temperature

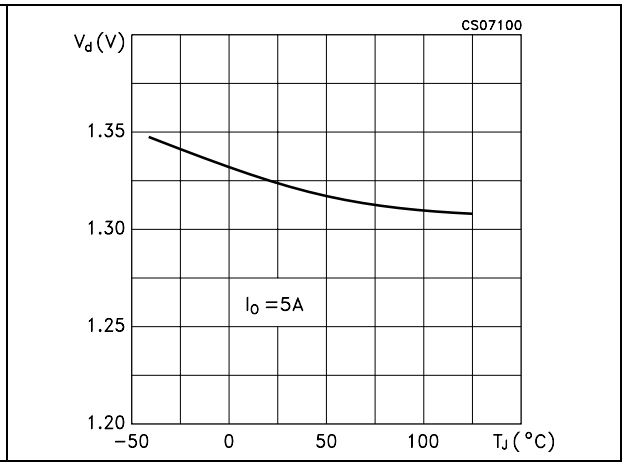

Figure 6. Short circuit current vs dropout voltage

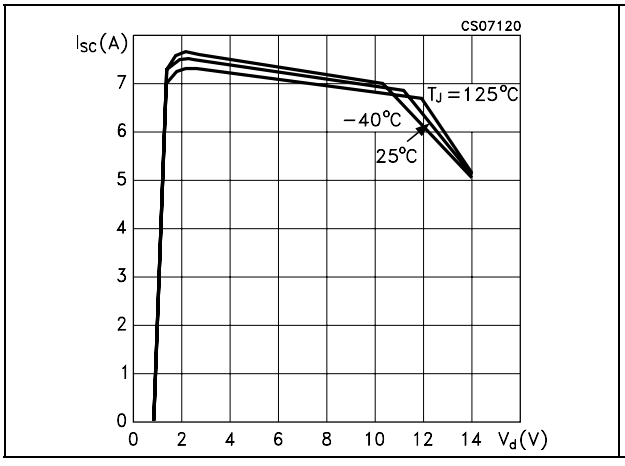

Figure 7. Line regulation vs temperature

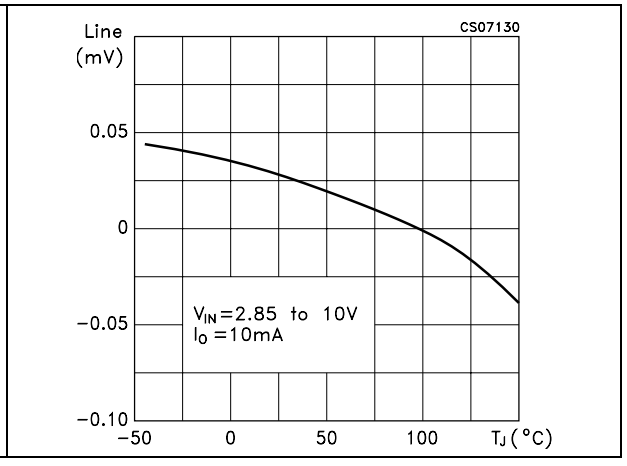

Figure 8. Output voltage vs temperature

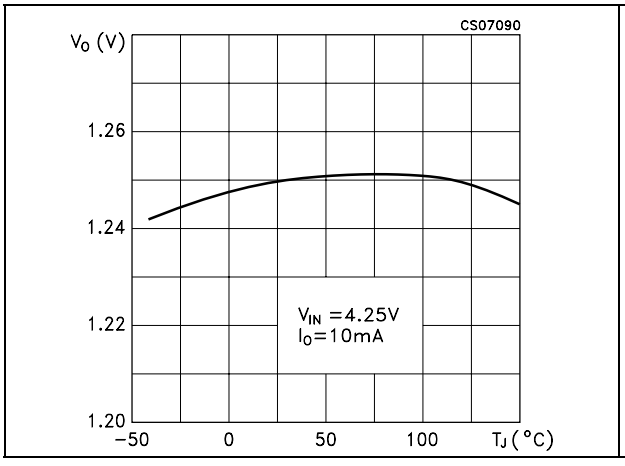

Figure 9. Load regulation vs temperature

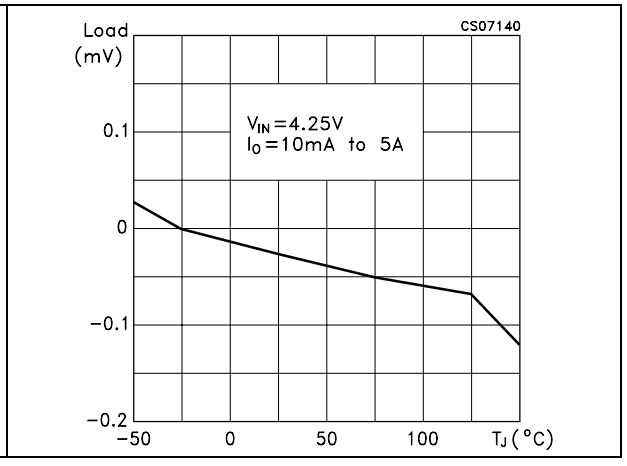

Figure 10. Supply voltage rejection vs frequency

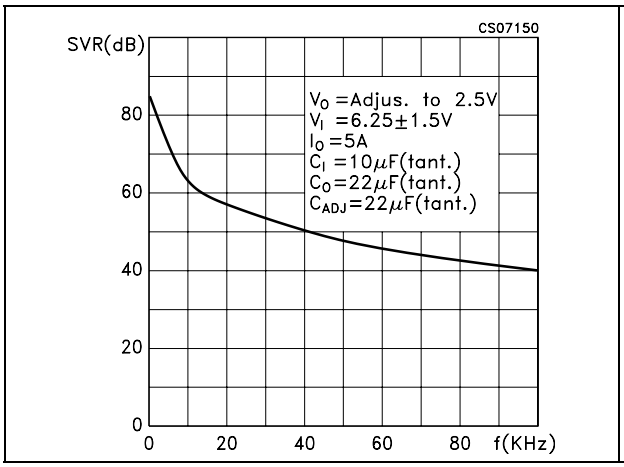

Figure 11. Adjust pin current vs output current

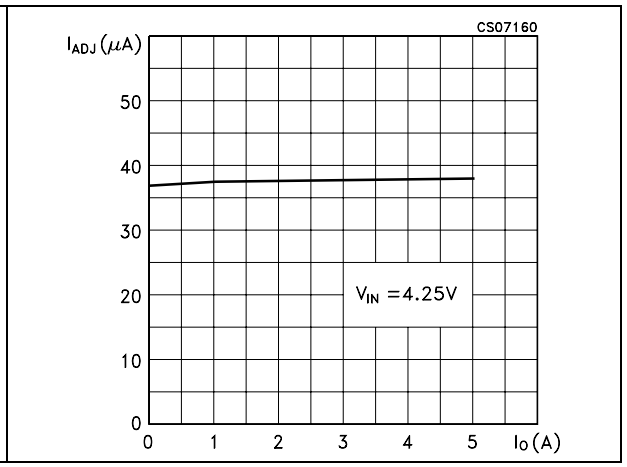

Figure 12. Line transient

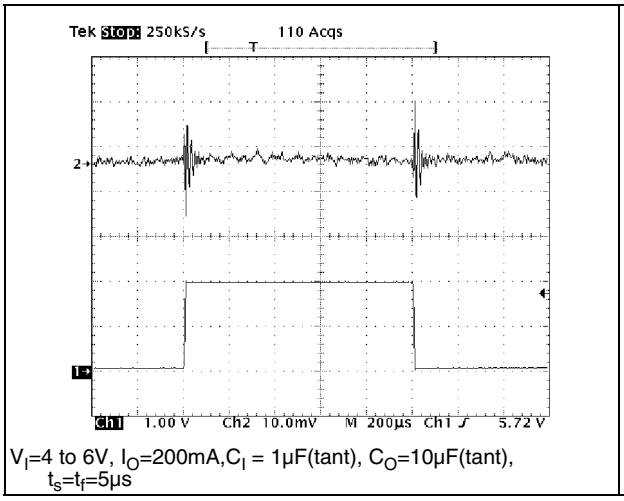

V_I=4 to 6V, I_O=200mA,C_I = 1μF(tant), C_O=10μF(tant), t_s=t_f=5μs

Figure 13. Load transient

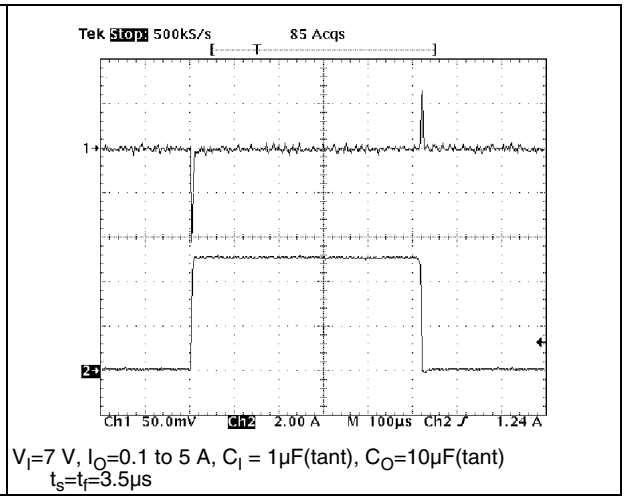

V_I=7 V, I_O=0.1 to 5 A, C_I = 1μF(tant), C_O=10μF(tant) t_s=t_f=3.5μs

7 Package mechanical data

In order to meet environmental requirements, ST offers these devices in ECOPACK® packages. These packages have a lead-free second level interconnect. The category of second Level Interconnect is marked on the package and on the inner box label, in compliance with JEDEC Standard JESD97. The maximum ratings related to soldering conditions are also marked on the inner box label. ECOPACK is an ST trademark. ECOPACK specifications are available at: www.st.com.

TO-220 mechanical data

Dim.	mm.			inch.		
	Min.	Typ.	Max.	Min.	Typ.	Max.
A	4.40		4.60	0.173		0.181
C	1.23		1.32	0.048		0.051
D	2.40		2.72	0.094		0.107
D1		1.27			0.050	
E	0.49		0.70	0.019		0.027
F	0.61		0.88	0.024		0.034
F1	1.14		1.70	0.044		0.067
F2	1.14		1.70	0.044		0.067
G	4.95		5.15	0.194		0.203
G1	2.4		2.7	0.094		0.106
H2	10.0		10.40	0.393		0.409
L2		16.4			0.645	
L4	13.0		14.0	0.511		0.551
L5	2.65		2.95	0.104		0.116
L6	15.25		15.75	0.600		0.620
L7	6.2		6.6	0.244		0.260
L9	3.5		3.93	0.137		0.154
DIA.	3.75		3.85	0.147		0.151

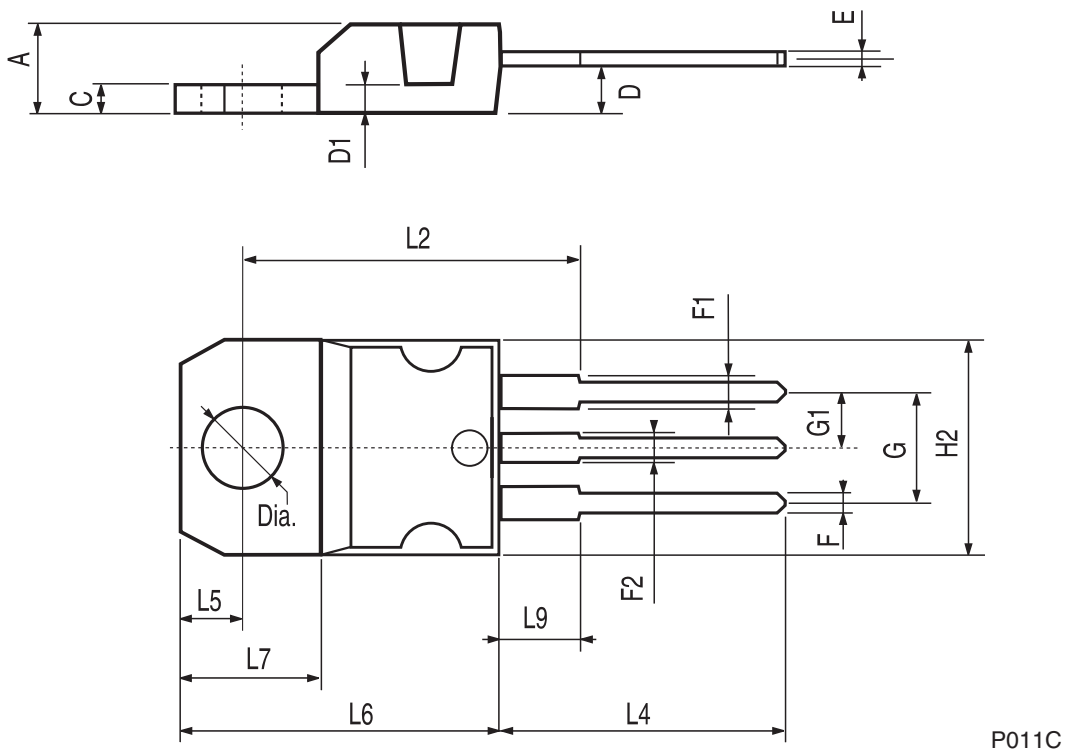

DPAK mechanical data

Dim.	mm.			inch.		
	Min.	Typ.	Max.	Min.	Typ.	Max.
A	2.2		2.4	0.086		0.094
A1	0.9		1.1	0.035		0.043
A2	0.03		0.23	0.001		0.009
B	0.64		0.9	0.025		0.035
b4	5.2		5.4	0.204		0.212
C	0.45		0.6	0.017		0.023
C2	0.48		0.6	0.019		0.023
D	6		6.2	0.236		0.244
D1		5.1			0.200	
E	6.4		6.6	0.252		0.260
E1		4.7			0.185	
e		2.28			0.090	
e1	4.4		4.6	0.173		0.181
H	9.35		10.1	0.368		0.397
L	1			0.039		
(L1)		2.8			0.110	
L2		0.8			0.031	
L4	0.6		1	0.023		0.039
R		0.2			0.008	
V2	0°		8°	0°		8°

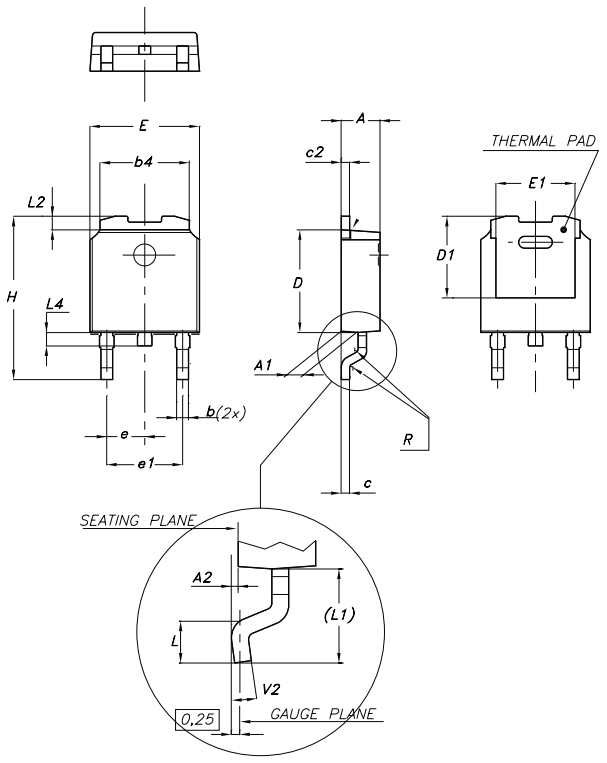

0068772-F

D^2PAK mechanical data

Dim.	mm.			inch.		
	Min.	Typ.	Max.	Min.	Typ.	Max.
A	4.4		4.6	0.173		0.181
A1	2.49		2.69	0.098		0.106
A2	0.03		0.23	0.001		0.009
B	0.7		0.93	0.027		0.036
B2	1.14		1.7	0.044		0.067
C	0.45		0.6	0.017		0.023
C2	1.23		1.36	0.048		0.053
D	8.95		9.35	0.352		0.368
D1		8			0.315	
E	10		10.4	0.393		0.409
E1		8.5			0.335	
G	4.88		5.28	0.192		0.208
L	15		15.85	0.590		0.624
L2	1.27		1.4	0.050		0.055
L3	1.4		1.75	0.055		0.068
M	2.4		3.2	0.094		0.126
R		0.4			0.016	
V2	0°		8°	0°		8°

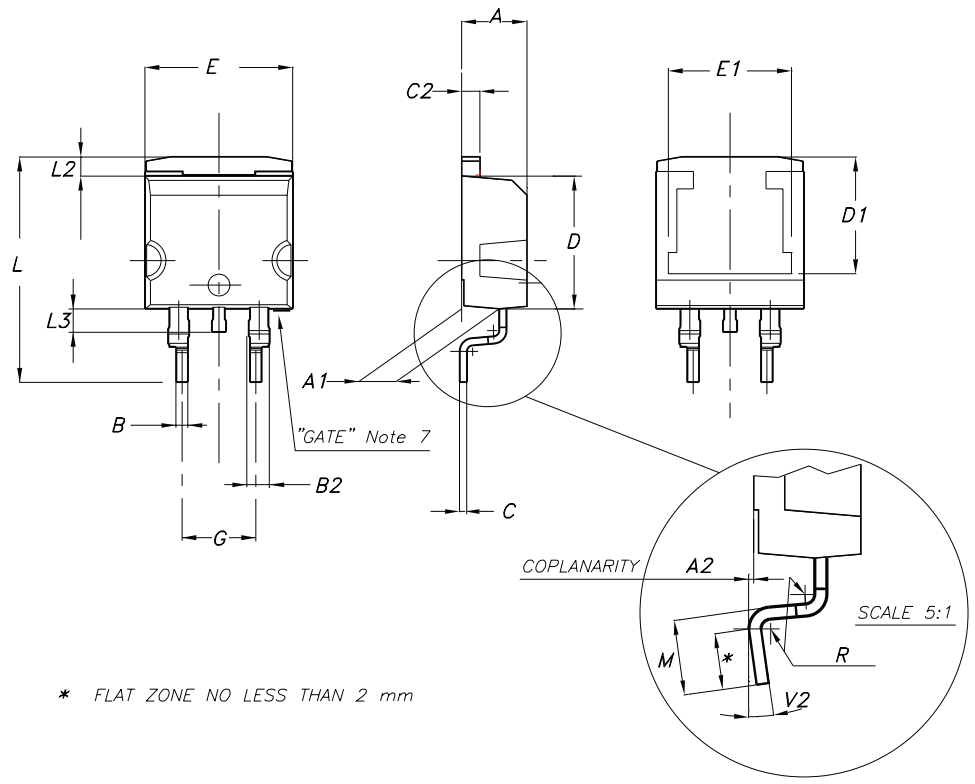

Tape & reel DPAK-PPAK mechanical data

Dim.	mm.			inch.		
	Min.	Typ.	Max.	Min.	Typ.	Max.
A			330			12.992
C	12.8	13.0	13.2	0.504	0.512	0.519
D	20.2			0.795		
N	60			2.362		
T			22.4			0.882
Ao	6.80	6.90	7.00	0.268	0.272	0.2.76
Bo	10.40	10.50	10.60	0.409	0.413	0.417
Ko	2.55	2.65	2.75	0.100	0.104	0.105
Po	3.9	4.0	4.1	0.153	0.157	0.161
P	7.9	8.0	8.1	0.311	0.315	0.319

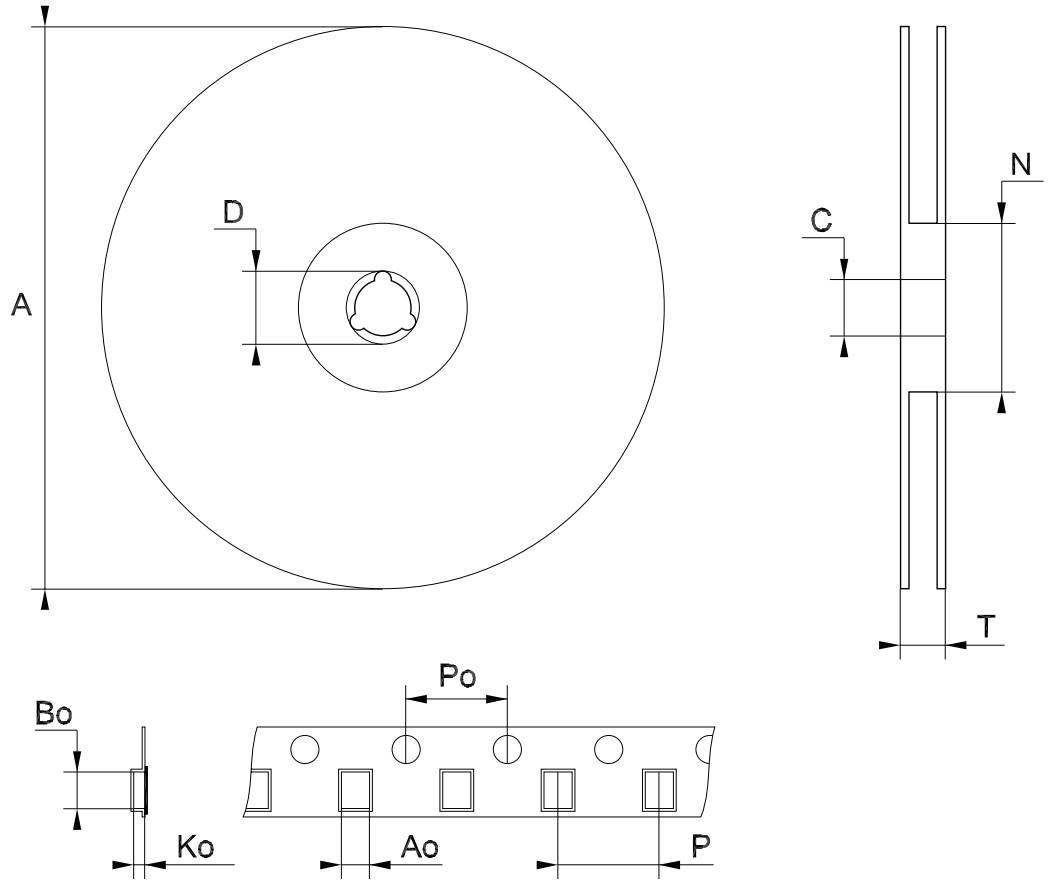

Note: Drawing not in scale

Tape & reel D^2PAK-P^2PAK-D^2PAK/A-P^2PAK/A mechanical data

Dim.	mm.			inch.		
	Min.	Typ.	Max.	Min.	Typ.	Max.
A			180			7.086
C	12.8	13.0	13.2	0.504	0.512	0.519
D	20.2			0.795		
N	60			2.362		
T			14.4			0.567
Ao	10.50	10.6	10.70	0.413	0.417	0.421
Bo	15.70	15.80	15.90	0.618	0.622	0.626
Ko	4.80	4.90	5.00	0.189	0.193	0.197
Po	3.9	4.0	4.1	0.153	0.157	0.161
P	11.9	12.0	12.1	0.468	0.472	0.476

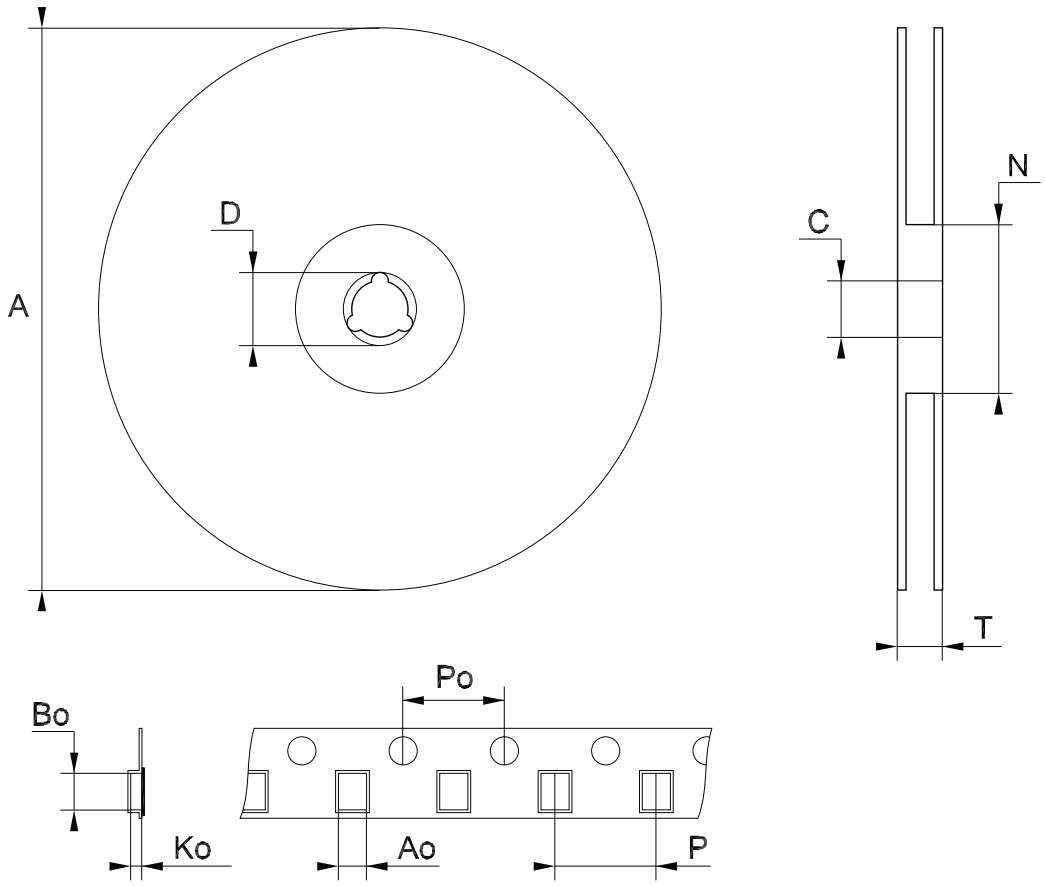

Note: Drawing not in scale

8 Revision history

Table 11. Document revision history

Date	Revision	Changes
06-Sep-2005	4	Order codes updated.
02-Apr-2007	5	Order codes updated.
30-May-2007	6	Order codes updated.
18-Dec-2007	7	Added *Table 1*.
21-Feb-2008	8	Modified: *Table 1 on page 1*.

Please Read Carefully:

Information in this document is provided solely in connection with ST products. STMicroelectronics NV and its subsidiaries (“ST”) reserve the right to make changes, corrections, modifications or improvements, to this document, and the products and services described herein at any time, without notice.

All ST products are sold pursuant to ST’s terms and conditions of sale.

Purchasers are solely responsible for the choice, selection and use of the ST products and services described herein, and ST assumes no liability whatsoever relating to the choice, selection or use of the ST products and services described herein.

No license, express or implied, by estoppel or otherwise, to any intellectual property rights is granted under this document. If any part of this document refers to any third party products or services it shall not be deemed a license grant by ST for the use of such third party products or services, or any intellectual property contained therein or considered as a warranty covering the use in any manner whatsoever of such third party products or services or any intellectual property contained therein.

UNLESS OTHERWISE SET FORTH IN ST’S TERMS AND CONDITIONS OF SALE ST DISCLAIMS ANY EXPRESS OR IMPLIED WARRANTY WITH RESPECT TO THE USE AND/OR SALE OF ST PRODUCTS INCLUDING WITHOUT LIMITATION IMPLIED WARRANTIES OF MERCHANTABILITY, FITNESS FOR A PARTICULAR PURPOSE (AND THEIR EQUIVALENTS UNDER THE LAWS OF ANY JURISDICTION), OR INFRINGEMENT OF ANY PATENT, COPYRIGHT OR OTHER INTELLECTUAL PROPERTY RIGHT.

UNLESS EXPRESSLY APPROVED IN WRITING BY AN AUTHORIZED ST REPRESENTATIVE, ST PRODUCTS ARE NOT RECOMMENDED, AUTHORIZED OR WARRANTED FOR USE IN MILITARY, AIR CRAFT, SPACE, LIFE SAVING, OR LIFE SUSTAINING APPLICATIONS, NOR IN PRODUCTS OR SYSTEMS WHERE FAILURE OR MALFUNCTION MAY RESULT IN PERSONAL INJURY, DEATH, OR SEVERE PROPERTY OR ENVIRONMENTAL DAMAGE. ST PRODUCTS WHICH ARE NOT SPECIFIED AS "AUTOMOTIVE GRADE" MAY ONLY BE USED IN AUTOMOTIVE APPLICATIONS AT USER’S OWN RISK.

Resale of ST products with provisions different from the statements and/or technical features set forth in this document shall immediately void any warranty granted by ST for the ST product or service described herein and shall not create or extend in any manner whatsoever, any liability of ST.

ST and the ST logo are trademarks or registered trademarks of ST in various countries.

Information in this document supersedes and replaces all information previously supplied.

The ST logo is a registered trademark of STMicroelectronics. All other names are the property of their respective owners.

© 2008 STMicroelectronics - All rights reserved

STMicroelectronics group of companies

Australia - Belgium - Brazil - Canada - China - Czech Republic - Finland - France - Germany - Hong Kong - India - Israel - Italy - Japan - Malaysia - Malta - Morocco - Singapore - Spain - Sweden - Switzerland - United Kingdom - United States of America

www.st.com